THIS COPY IS PROVIDED ON A RESTRICTED BASIS AND IS NOT TO BE USED IN ANY WAY DETRIMENTAL TO THE INTERESTS OF PANDUIT CORP.

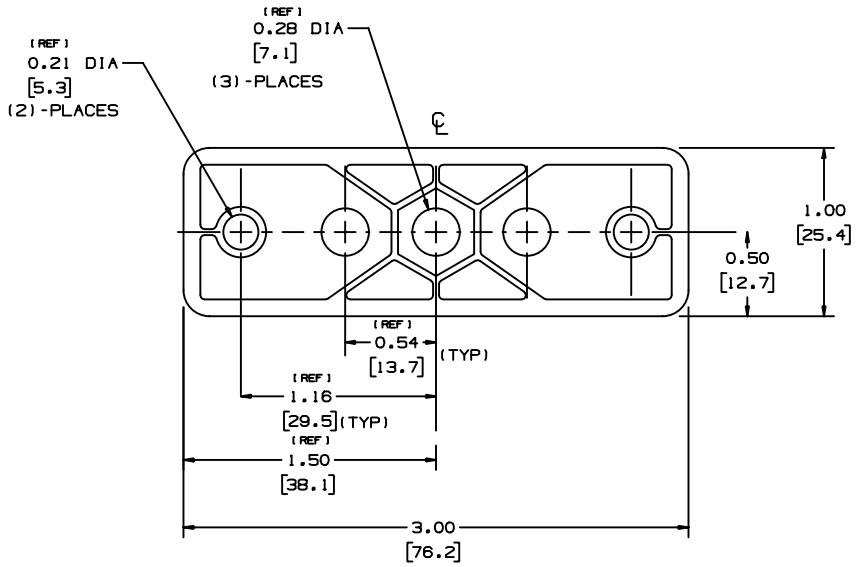

VIEW FROM BOTTOM

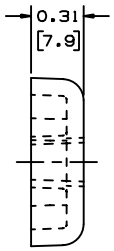

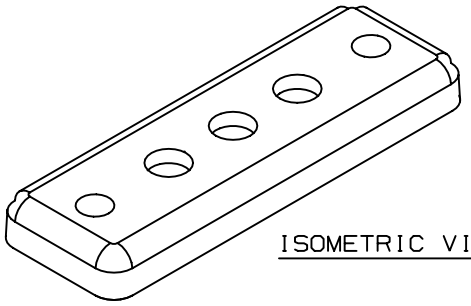

ISOMETRIC VIEW

NOTE:

1. SEE CURRENT PRICE SHEET FOR PART NUMBER SUFFIX DESIGNATION FOR PACKAGE SIZE.
2. COLOR: BLACK

DIMENSIONS IN BRACKETS ARE METRIC [mm]

CAD FILENAME/LAYERS: GB0300BA_PB_HBUA_02

REV	DATE	BY	CHK	DESCRIPTION	ECN - R	CUST	SUP	Q.C.
2	08/28/01	LGG		ADDED REF TO DIMS	GB0300BA 2			
1	12/11/92	JRL		ADDED METRIC DIMS.	GB0300BA 1			
R	11/20/92	TNT		INITIAL RELEASE	GB0300BA R			

PANDUIT CORP. TINLEY PARK, ILLINOIS

HBUA
HARNESS BOARD UNIVERSAL ADAPTER

UNLESS OTHERWISE SPECIFIED, DIMENSIONAL TOLERANCES ARE:
(.X) ±0.05 [1.3] (.XXX) ±0.010 [0.25]
(.XX) ±0.02 [0.5] ANGLES ± 5°

UNLESS OTHERWISE SPECIFIED, ALL DIMENSIONS ARE GIVEN IN INCHES, THIRD ANGLE PROJECTION.

DRAWN BY: TNT
DATE: 11/20/92
CHK'D:
MAT'L: NYLON 6/6
SCALE: FULL
DRAWING NO.: GB0300BA
DWG SIZE: A